SALES & ENGINEERING DATA

PD20A-XXX-XXX-B / PD20S-XXX-XXX-B
PE20A-XXX-XXX-B( ) / PE20S-XXX-XXX-B( )
2” METALLIC DIAPHRAGM PUMP

RATIO SERIES:	1:1
FLUID P.S.I. RANGE:	20 - 120

RELEASED: 2-3-05
REVISED: 9-15-11
(REV. 05) S-1338

DIMENSIONAL DATA

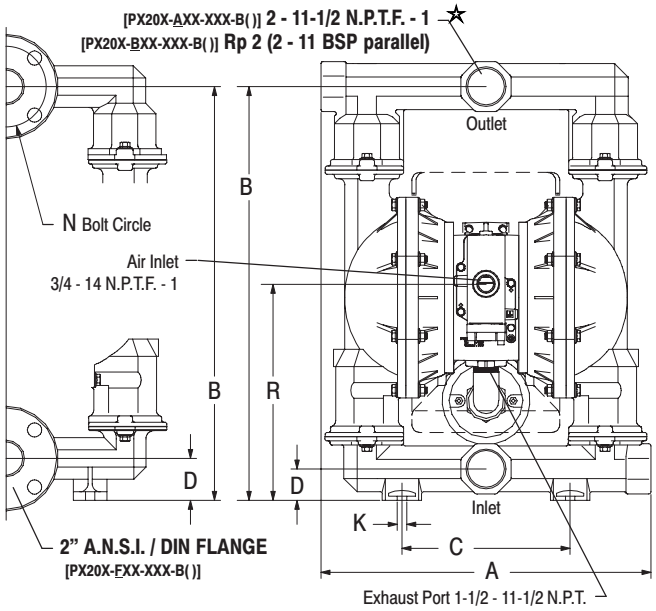

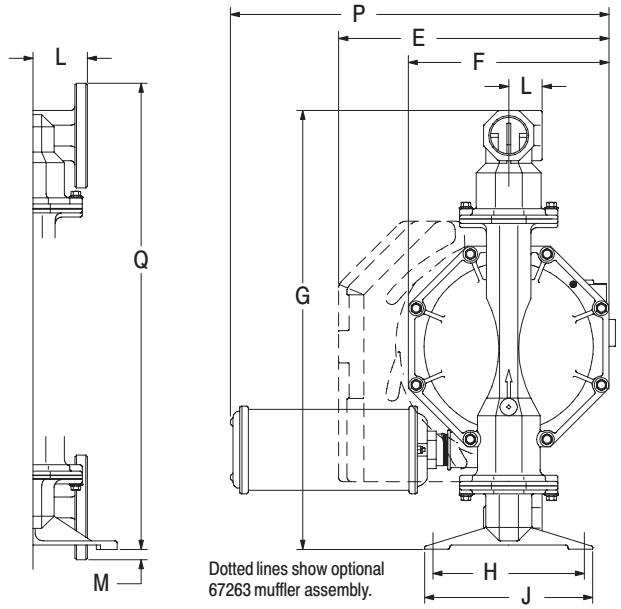

DIMENSIONS

A	see below	G	26-1/4” (666.8 mm)	M	5/8” (15.9 mm)
B	24-3/4” (628.7 mm)	H	9-1/16” (230.2 mm)	N	4.834” (122.8 mm)
C	10-1/16” (255.6 mm)	J	10-1/16” (255.6 mm)	P	21-5/8” (548 mm)
D	see below	K	9/16” (14.3 mm)	Q	27-7/8” (708.0 mm)
E	16-3/16” (411.2 mm)	L	see below	R	see below
F	12” (304.8 mm)				

SPECIFICATIONS

CONSTRUCTION

Model Series . . . . . PD20A-X-X-B / PD20S-X-X-B
. . . . . PE20A-X-X-B( ) / PE20S-X-X-B( )
Pump Type . . . . . Metallic, Air Operated, Double Diaphragm
Ratio 1:1
Material Inlet / Outlet (female)
PX20X-AXX-XXX-B( ) . . . . . 2 - 11-1/2 N.P.T.F. - 1
PX20X-BXX-XXX-B( ) . . . . . Rp 2 (2 - 11 BSP parallel)
PX20X-FXX-XXX-B( ) . . . . . 2” A.N.S.I. / DIN Flange
Air Inlet (female) . . . . . 3/4 - 14 N.P.T.F. - 1
Air Exhaust (female) . . . . . 1-1/2 - 11-1/2 N.P.T.
Weight . PX20A-XAX-XXX-B( ) . . . . . 91.4 lbs (41.5 kgs)
PX20A-XCX-XXX-B( ) . . . . . 147.4 lbs (66.9 kgs)
PX20A-AHX-XXX-B( ), -BHX . . . 155.0 lbs (70.3 kgs)
PX20A-ASX-XXX-B( ), -BSX . . . 149.8 lbs (68.0 kgs)
PX20A-FHX-XXX-B( ), ... 169.4 lbs (76.8 kgs)
PX20A-FSX-XXX-B( ), ... 162.0 lbs (73.5kgs)
(add 28.9 lbs [13.1 kgs] for stainless steel air motor section)
Air Section Service Kit 637421
Fluid Section Service Kit 637309-XX
Major Air Valve Assembly 637374-X

PX20X-XXX-X X X -B( )
637309 - X X
Diaphragm Material
Ball Material

EXAMPLE: Model # PD20A-AAP-AAA-B
Fluid Section Service Kit is 637309-AA

PERFORMANCE

Air Inlet Pressure Range . . . . . 20 - 120 p.s.i. (1.4 - 8.3 bar)
Maximum Material Inlet Pressure . . . . . 10 p.s.i. (0.69 bar)
Fluid Pressure Range . . . . . 20 - 120 p.s.i. (1.4 - 8.3 bar)
Maximum Flow Rate . . . . . 172 g.p.m. (651 l.p.m.)
Displacement / Cycle @ 100 p.s.i. . . . . . 1.4 gal. (5.3 lit.)
Maximum Particle Size . . . . . 1/4” dia. (6.4 mm)
Maximum Temperature Limits (diaphragm / ball / seal material)
E.P.R. / EPDM . . . . . -60° to 280° F (-51° to 138° C)
Hytrel® . . . . . -20° to 150° F (-29° to 66° C)
Nitrile . . . . . 10° to 180° F (-12° to 82° C)
PVDF (Kynar®) . . . . . 10° to 200° F (-12° to 93° C)
Santoprene® . . . . . -40° to 225° F (-40° to 107° C)
PTFE . . . . . 40° to 225° F (4° to 107° C)
Viton® . . . . . -40° to 350° F (-40° to 177° C)
Noise Level @ 70 p.s.i. - 60 c.p.m.① . . . 85.0 db(A)②

① Tested with 67263 muffler assembly installed.
② The pump sound pressure level has been updated to an Equivalent Continuous Sound Level (L_{Aeq}) to meet the intent of ANSI S1. 13-1971, CAGI-PNEUROP S5.1 using four microphone locations.

ACCESSORIES:
66312 Air Line Connection Kit
67263 Continuous Muffler
94117 Int. Muffler

	“A”	“D”	“L”	“R”
PX20X-XAX-XXX-B( )	19-3/4” (501.4 mm)	1-7/8” (47.6 mm)	2” (50.8 mm)	12-15/16” (328.6 mm)
PX20X-XCX-XXX-B( )	19-3/4” (501.4 mm)	1-7/8” (47.6 mm)	2” (50.8 mm)	12-15/16” (328.6 mm)
PX20X-AHX-XXX-B( ), -BHX	19-1/4” (488.7 mm)	2-1/2” (63.5 mm)	2-3/32” (53.0 mm)	13-9/16” (344.5 mm)
PX20X-ASX-XXX-B( ), -BSX	19-1/4” (488.7 mm)	2-1/2” (63.5 mm)	2-3/32” (53.0 mm)	13-9/16” (344.5 mm)
PX20X-FHX-XXX-B( ), -FSX	19-1/4” (488.7 mm)	2-1/2” (63.5 mm)	3-1/4” (82.6 mm)	13-9/16” (344.5 mm)

NOTE: Dimensions are shown in inches and (mm), supplied for reference only and are typically rounded up to the nearest 1/16 inch.

★ **Side Discharge Ports are not available on PX20X-XSX-X-B Models.**

airpumping.co.uk
est 1979
Unit 16, Upminster Trading Park, Warley St., Upminster, Essex, RM14 3PJ, ENGLAND

ARO
Ingersoll Rand
Industrial Technologies
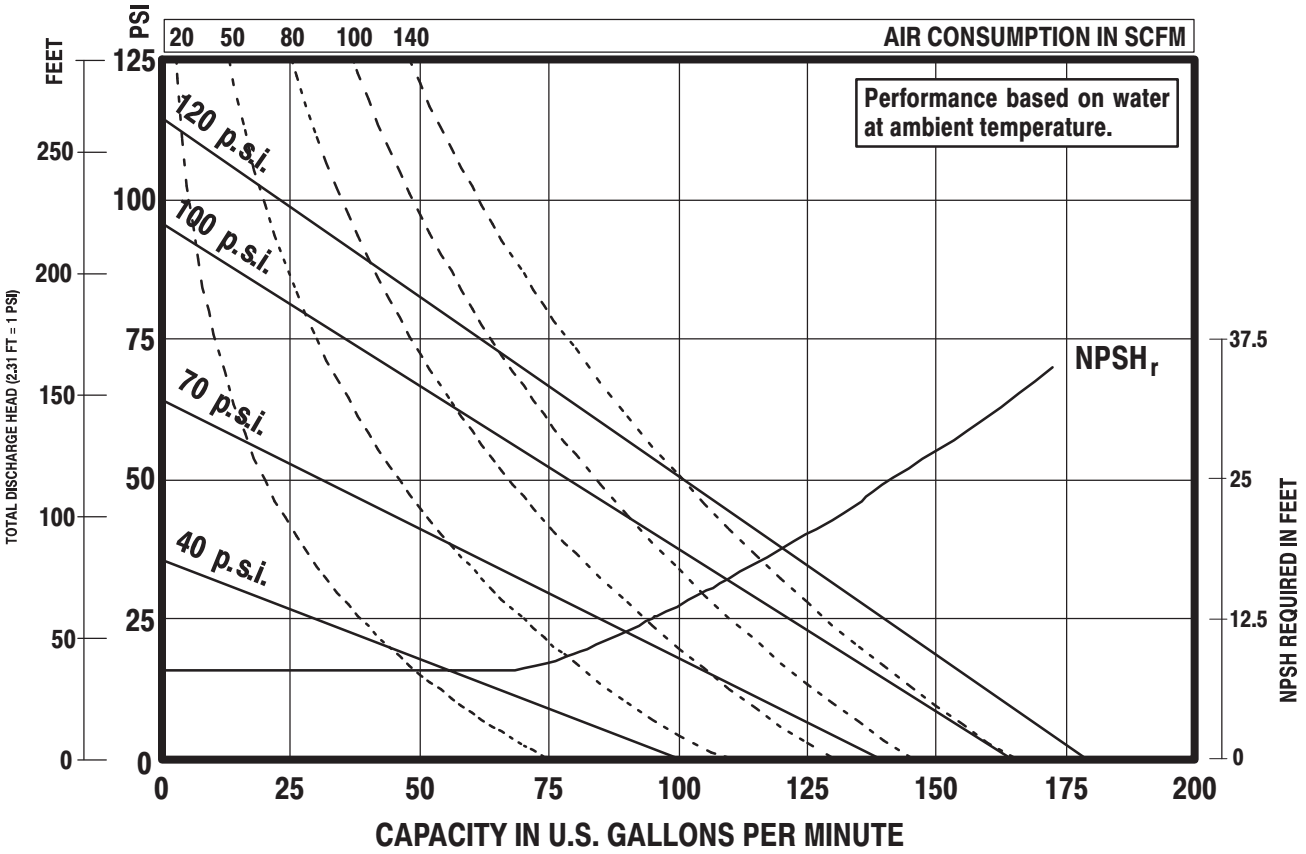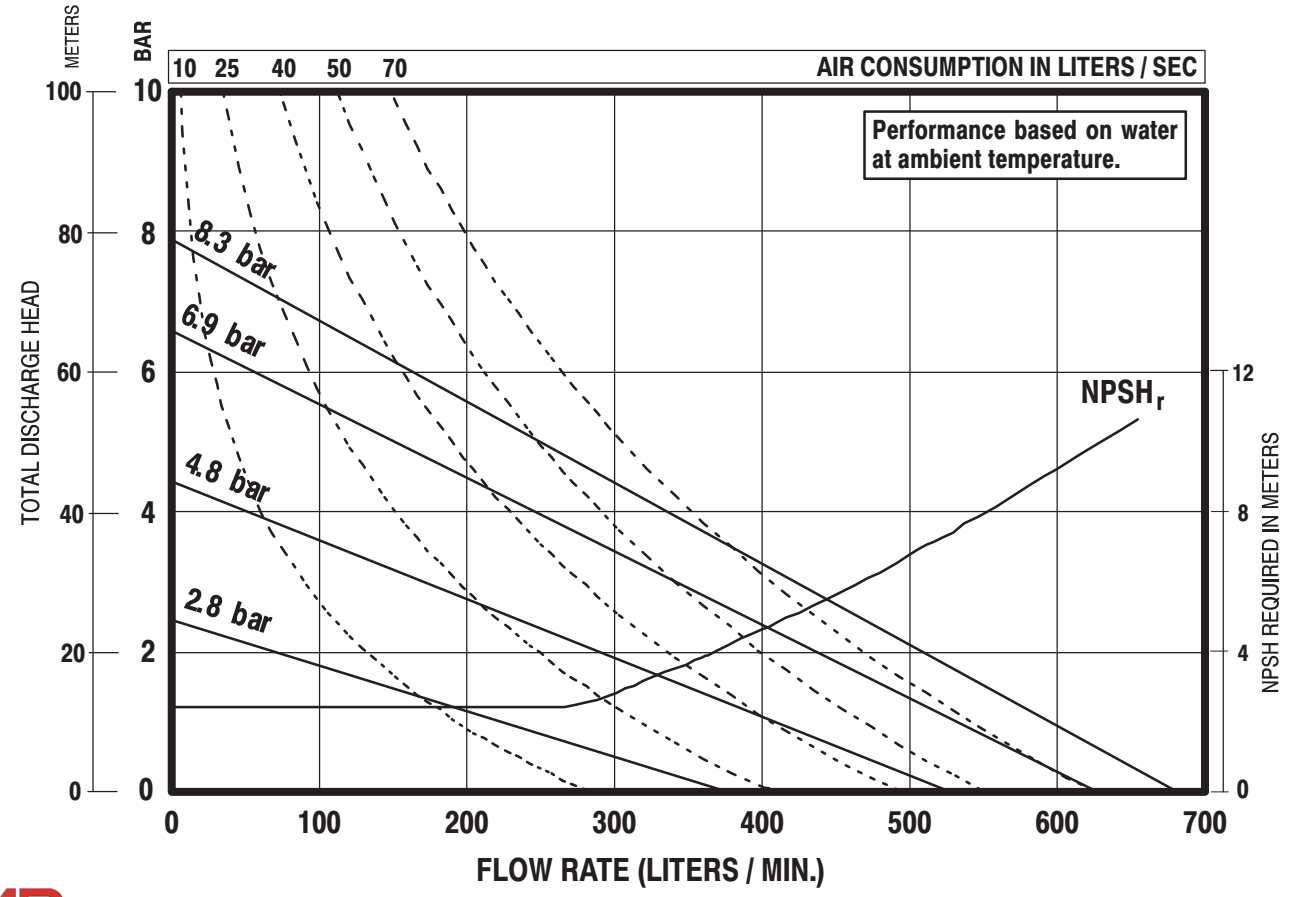
PD20X-XXX-XXX-B / PE20X-XXX-XXX-B( ) 2" METALLIC DIAPHRAGM PUMP